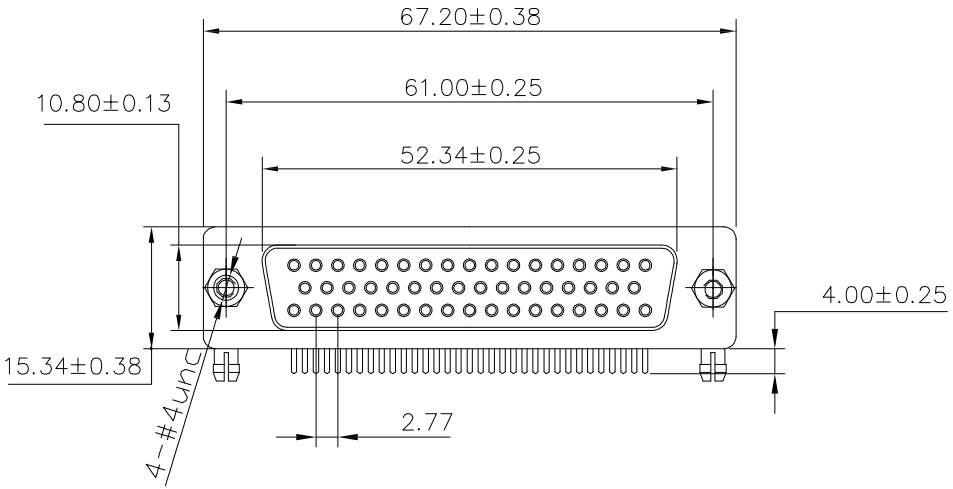

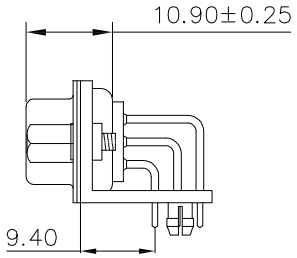

Voltage Current Rating: 5 AMP.

Dielectric Withstanding Voltage: 1000V AC

Insulation Resistance: 5000MΩ Min.

Temperature Range: −45℃ to +85℃

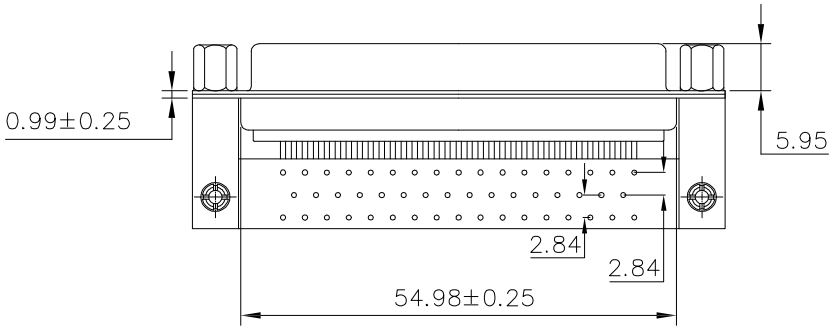

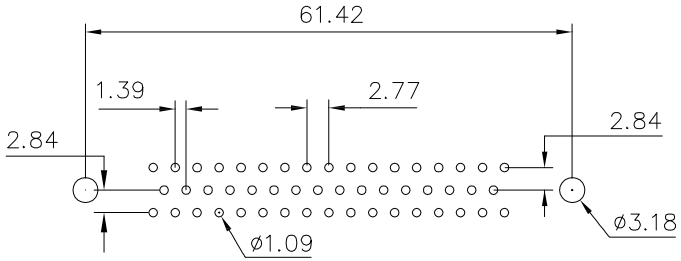

ITEM	DESC.	MATERIAL	REMAKS	PART REMAKS
5	SCREW	STEEL	PALTING: Ni	
4	BOARDLOCK	COPPER ALLOY	PALTING: Ni	
3	HOUSING	PBT+30%GF	COLOR: White	
2	SHELL	SPCC	PALTING: Ni	
1	TERMINAL	COPPER ALLOY	CONTACT AREA: Au 2u" SOLDER AREA: Au 2u" UNDER-PLATING: Ni	

NAME:	D-SUB 50Pin Female R/A Type 车针	PART NO.	B05-0506514D-02

REV:	A	UNIT:	mm	DRW BY	CHK BY	APP BY	DRAWING NO.
SCALE:	N:1	DATE:	2022/03/11	Huangmei	Jack Chen		B05-050

SIDE	DATE	DESCRIPTION	APPROVER
A	2022/03/11	NEW ISSUE	Jack Chen

QUALITY SYMBOLS

□: CRITICAL ⊠: MAJOR

▽: ZERO DEFECT ▽: S.P.C

Toleance

x.	±0.60
.x	±0.40
.xx	±0.25

KinKuo 东莞市箐国电子有限公司

www.KinKuo.com