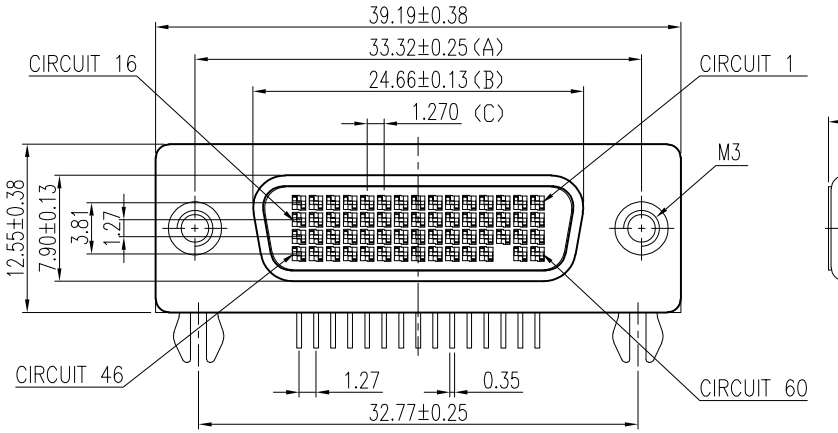

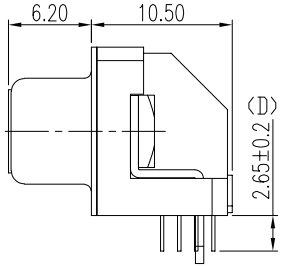

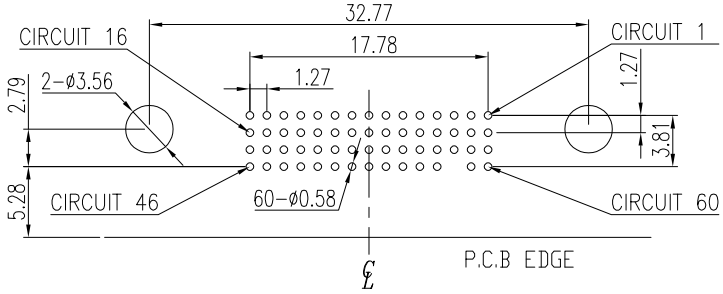

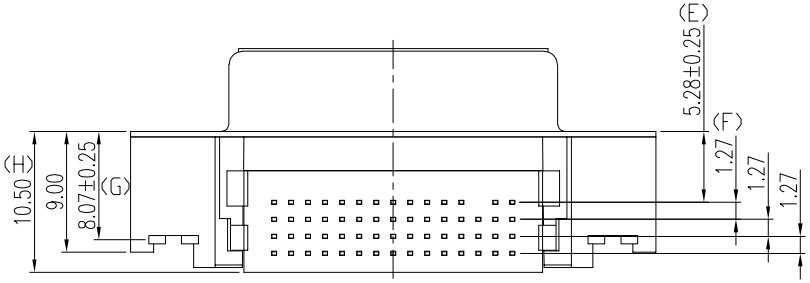

SPECIFICATIONS

1.1 Voltage: 40 VAC(RMS)
1.2 Current Rating: 3 Ampere per Contact
1.3 Contact Resistance: 20 Milliohms Max.
1.4 Insulation Resistance: 500 Megohms Min.
1.5 Dielectric Withstanding Voltage: 500V DC(RMS)
1.6 Total Mating Force: 4.5 Kgf Max.
1.7 Total Unmating Force: 1.0 Kgf Min.
1.8 Durability: 500 cycles
1.9 Operating Temperature: -20°C to +80°C

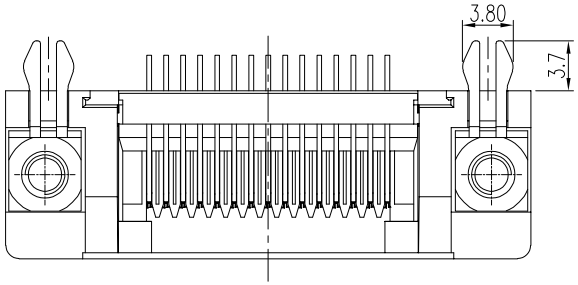

NO.	PART NAME	DESCRIPTION	QTY	UNIT
3	Screw	Steel Ni Plated	2	pcs
2	Rivet	Copper Alloy Ni Plated	2	pcs
1	Boardlock	Copper Alloy Ni Plated	2	pcs
3	Shell	SPCC Ni Plated	1	pcs
2	Terminal	Copper Alloy, Contact Area: Au G/F, Solder Area: Sn Plated	60	pcs
1	Housing	LCP, UL 94V-0, Color:Black.	2	pcs

REV	DATE	DESCRIPTION	APPROVER
A	2024/03/11	NEW ISSUE	Jack Chen

QUALITY SYMBOLS
□: CRITICAL
⊠: MAJOR
▽: ZERO DEFECT
▽: S.P.C

Toleance
x. ±0.60
.x ±0.40
.xx ±0.25

PART NAME:	DMS 59Pin Female Connector R/A Type				PART NO:	B04-059411AN-01	
REV:	A	UNIT:	mm	DRW BY	CHK BY	APP BY	DRAWING NO.
SCALE:	N:1	DATE:	2024/03/11	Huangmei	Jack Chen		B04-059

KinKuo 东莞市箐国电子有限公司
www.KinKuo.com