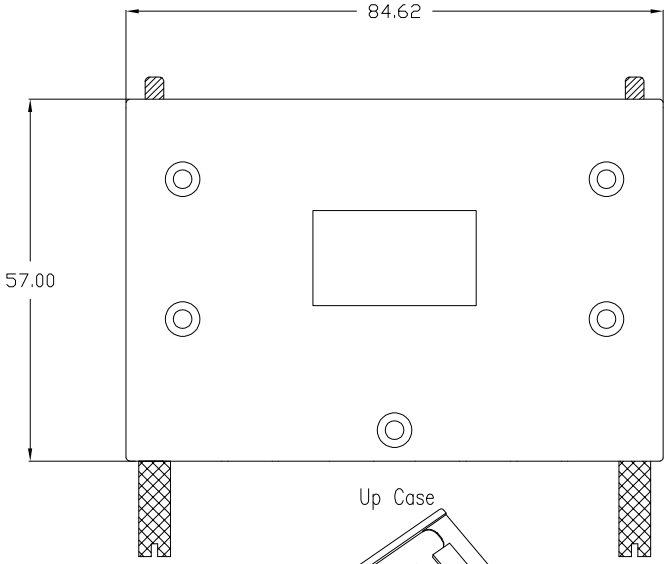

Up Case

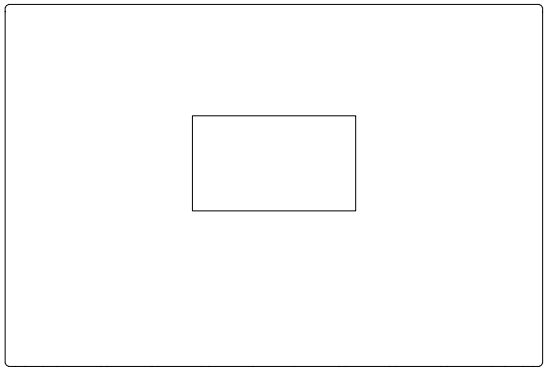

Down Case

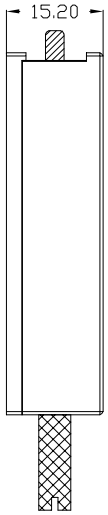

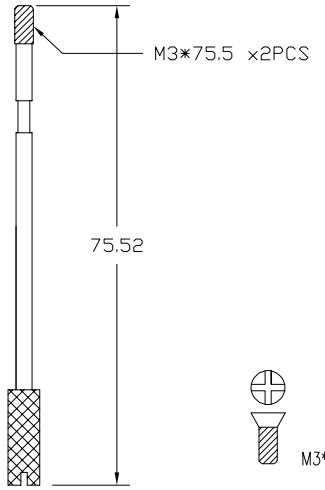

Screw-1

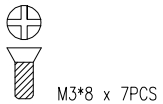

Screw-2

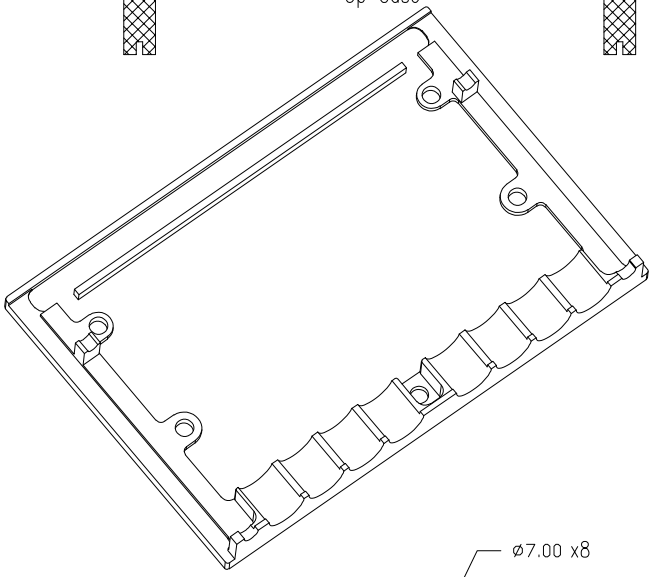

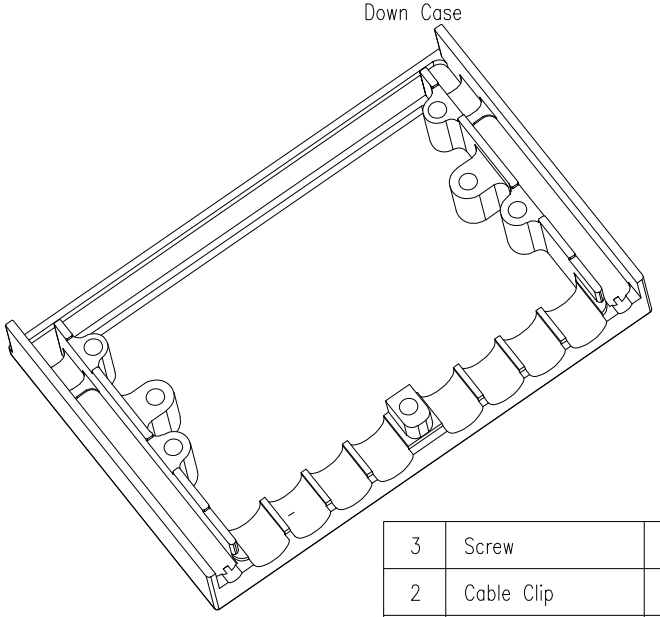

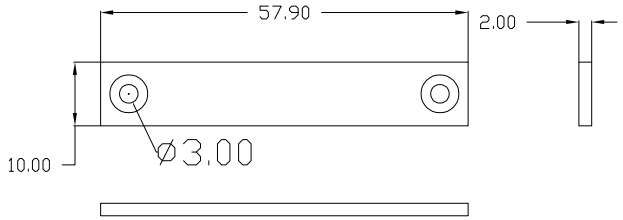

Cable Clip

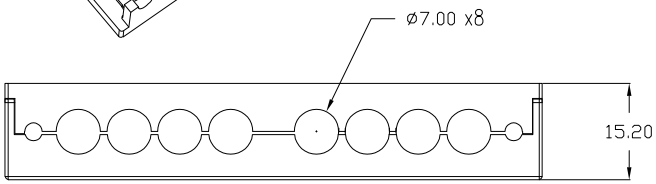

NO.	PART NAME	DESCRIPTION	QTY	UNIT
3	Screw	M3 Screw Steel	9	pcs
2	Cable Clip	Aluminum alloy	1	pcs
1	Up/Down Case	Aluminum alloy	2	pcs

PART NAME:	LFH-200P CASE (With 8 Wire hole)			PART NO:	71719-H002
REV:	A	UNIT:	mm	DRW BY	Huangmei
SCALE:	N:1	DATE:	2025/06/26	CHK BY	Jack Chen
APP BY		DRAWING NO.	71719-H		

REV	DATE	DESCRIPTION	APPROVER
A	2025/06/26	NEW ISSUE	Jack Chen

QUALITY SYMBOLS

□: CRITICAL

⊠: MAJOR

▽: ZERO DEFECT

▽: S.P.C

Toleance

x.	±0.60
.x	±0.40
.xx	±0.25

KinKuo 东莞市箐国电子有限公司

www.KinKuo.com