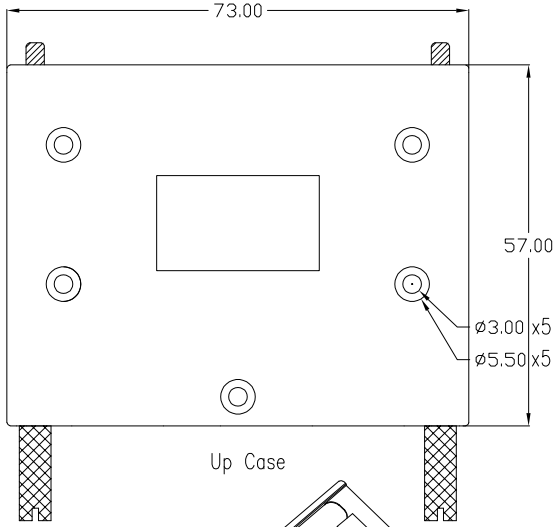

Up Case

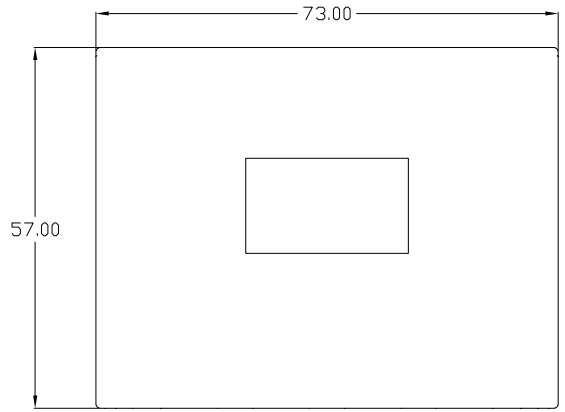

Down Case

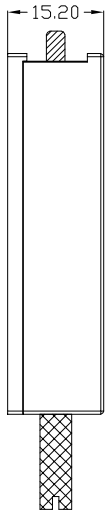

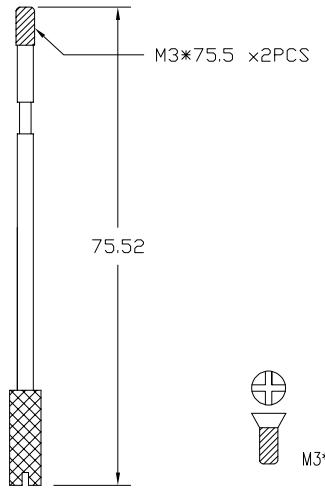

Screw-1

M3*8 x 7PCS

Screw-2

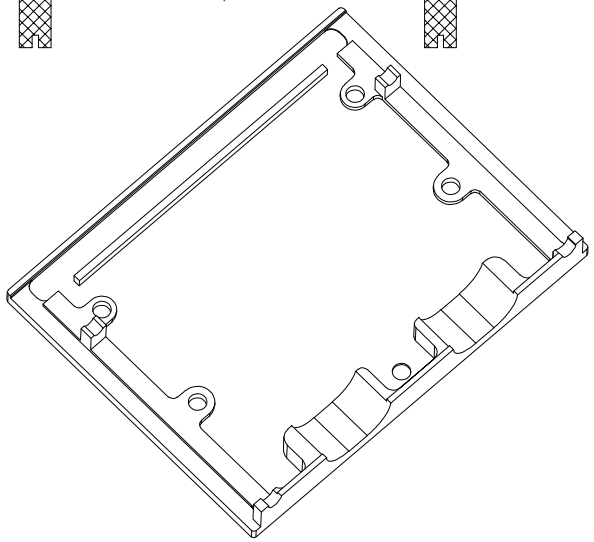

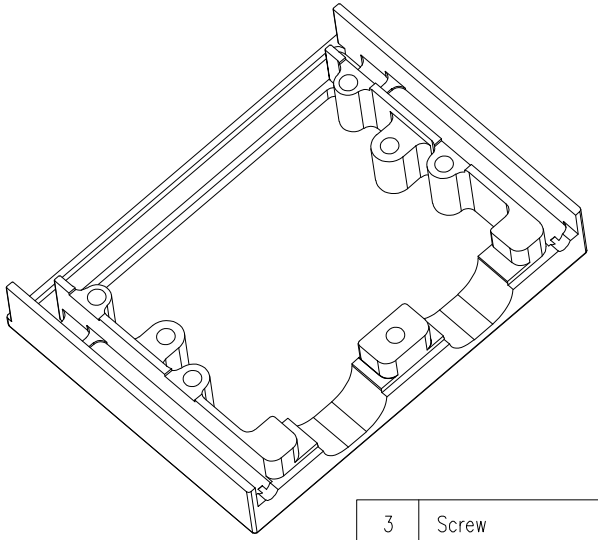

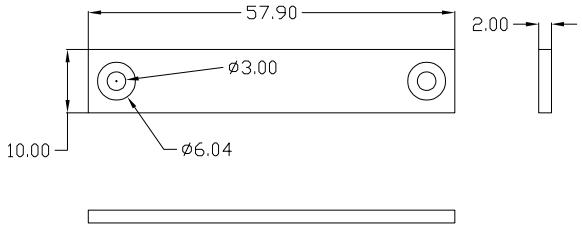

Cable Clip

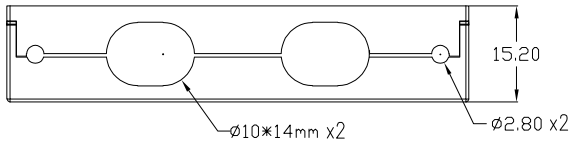

NO.	PART NAME	DESCRIPTION	QTY	UNIT
3	Screw	M3 Screw Steel	9	pcs
2	Cable Clip	Aluminum alloy	1	pcs
1	Up/Down Case	Aluminum alloy	2	pcs

PART NAME:	LFH-160P CASE (With 2 Wire hole)	PART NO:	71624-H001

REV	DATE	DESCRIPTION	APPROVER
A	2025/06/26	NEW ISSUE	Jack Chen

QUALITY SYMBOLS

□: CRITICAL

⊠: MAJOR

▽: ZERO DEFECT

▽: S.P.C

Toleance

x.	±0.60
.x	±0.40
.xx	±0.25

REV:	A	UNIT:	mm	DRW BY	CHK BY	APP BY	DRAWING NO.
SCALE:	N:1	DATE:	2025/06/26	Huangmei	Jack Chen		71624-H

KinKuo 东莞市箐国电子有限公司

www.KinKuo.com